Product & Service Datasheet

Subsea Power Cable Offshore Installation & Termination Accessories

Power CSL supplies a range of accessories to ensure the safe and efficient installation and operation of medium and high voltage subsea power cables.

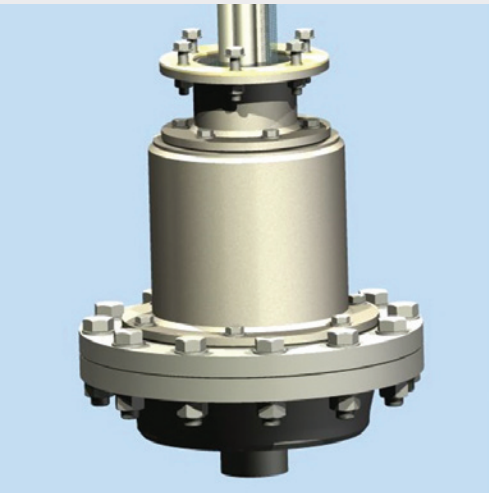

Datasheet PCSL DS 1004 1SS1

Product & Service Datasheet

Subsea Power Cable Offshore Installation & Termination Accessories

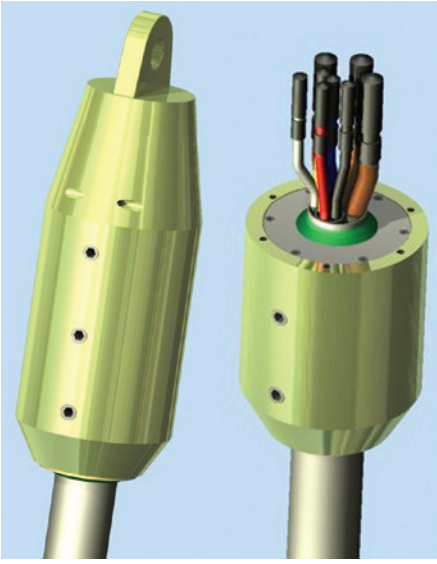

Pulling Heads

Connecting directly on to the cable armour (single or double wire) via resin encapsulation the design ensure that tensional forces associated with installation are borne by the armour. A combination of heat shrink and mastic seals coupled with marine grade resin protection provides water barriers to protect the cable functional components from the possibility of water ingress.

The novel design can be configured to allow access to the cable power cores and optical components to facilitate post hang-off testing of the installed cable.

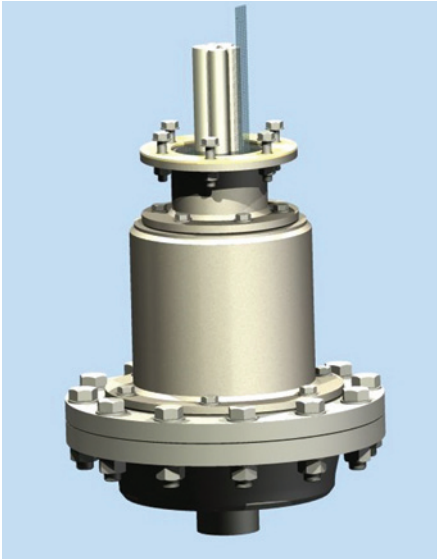

Cable Hang-off / Armour Termination / Transition Joint

Once the cable end has been 'landed' at the platform deck it must be secured in a way that will ensure (for the life of the installation) that the mechanical forces associated with the suspended cable will be safely carried by the armour and that the power cores (and where incorporated optical fibre and LV control components) are either carried through for termination or transitioned to topside cables. Power CSL hang-offs are designed to project specific requirements and are suitable for offshore wind turbine, oil & gas platform or FPSO applications.

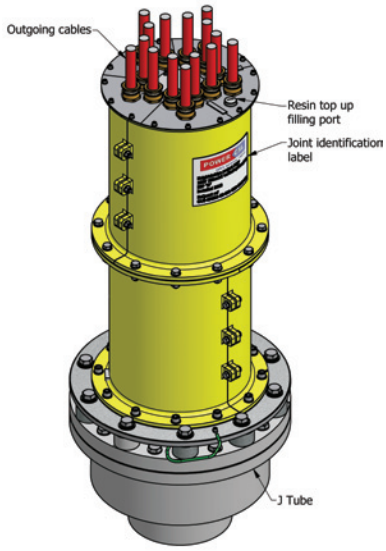

Custom Made Accessories

Power CSL has extensive experience in the design, testing and installation of bespoke accessories where more standard solutions may not be appropriate or adequate.

POWER CSL
Unit 7, Jackson Park, Kingsnorth Industrial Estate, Hoo, Rochester, Kent ME3 9GA
Tel +44 (0)1634 253838 **Email** info@powercsl.com **Web** www.powercsl.com

Datasheet PCSL DS 1004 1SS1